Key Lock-in Prevention Function does not Work Properly

DESCRIPTION

The unlock warning switch turns on when the key is inserted into the ignition key cylinder and the door courtesy switch turns on when the driver side door is opened. The integration relay monitors the condition of both switches. If the integration relay detects that both the unlock warning switch and door courtesy switch are on, the integration relay prevents door lock operations so that the key cannot be locked in the vehicle.

WIRING DIAGRAM

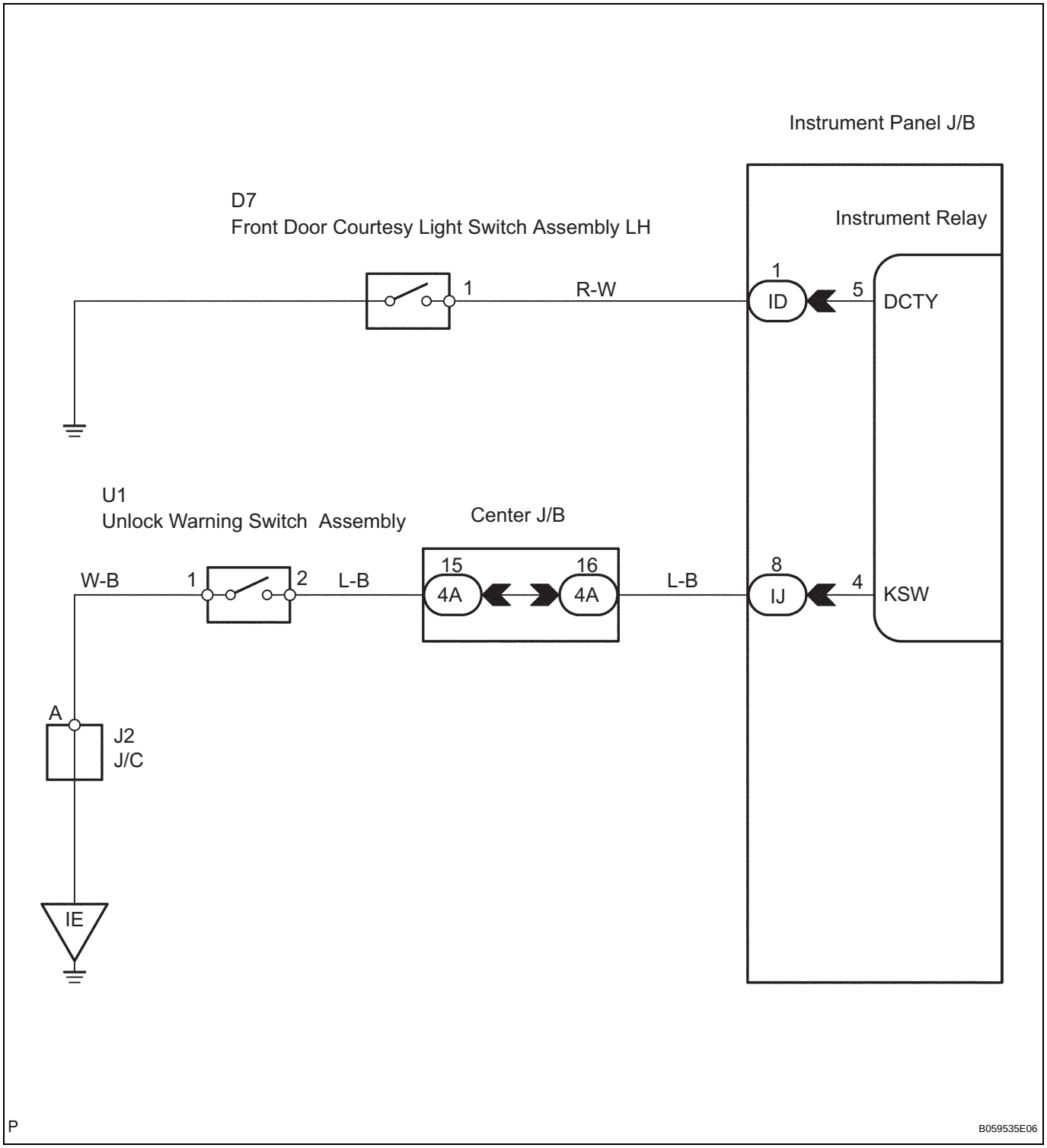

INSPECTION PROCEDURE

1 INSPECT UN-LOCK WARNING SWITCH ASSEMBLY

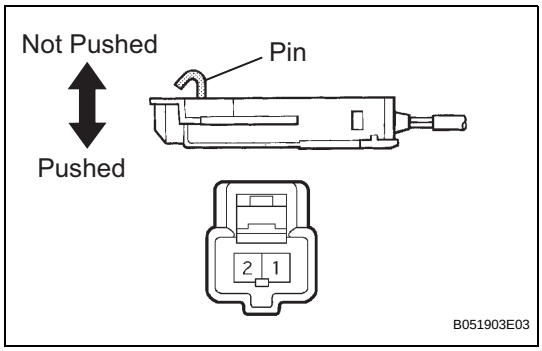

(a) Remove the key unlock warning switch.
(b) Measure the resistance according to the value(s) in the table below.

Standard resistance

Tester Connection	Condition	Specified Condition
1 - 2	Not Pushed	10 kΩ or higher
1 - 2	Pushed	Below 1 Ω

NG → **REPLACE UN-LOCK WARNING SWITCH ASSEMBLY**

OK

DL

2 CHECK HARNESS AND CONNECTOR (UN-LOCK WARNING SWITCH - INSTRUMENT PANEL J/B)

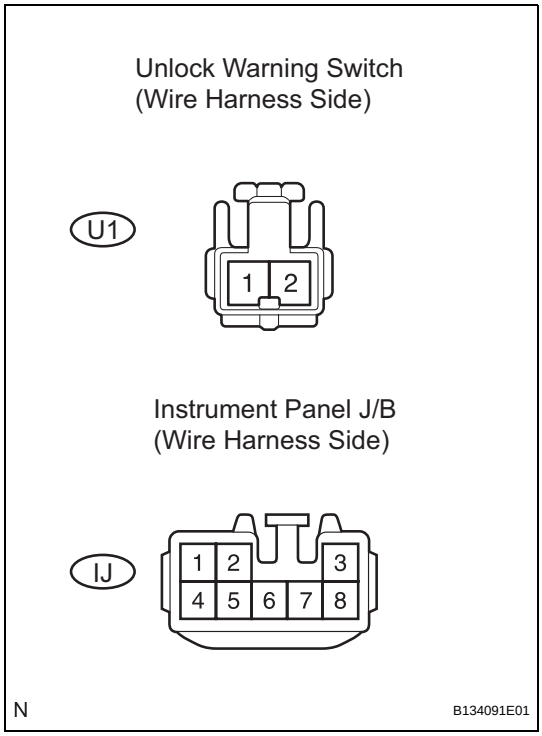

(a) Disconnect the U1 unlock warning switch and IJ instrument panel J/B connectors.
(b) Measure the resistance according to the value(s) in the table below.

Standard resistance (Check for open)

Tester Connection	Specified Condition
2 (U1-2) - KSW (IJ-8)	Below 1 Ω
1 (U1-1) - Body ground	Below 1 Ω

NG → **REPAIR OR REPLACE HARNESS OR CONNECTOR**

OK

3 INSPECT FRONT DOOR COURTESY LIGHT SWITCH ASSEMBLY (DRIVER SIDE)

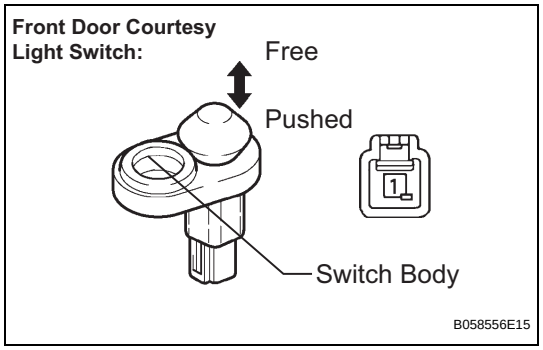

(a) Remove the courtesy light switch.
(b) Measure the resistance according to the value(s) in the table below.

Standard resistance

Tester Connection	Switch Condition	Specified Condition
1 - Body ground	Free	Below 1 Ω
1 - Body ground	Push	10 kΩ or higher

NG → **REPLACE FRONT DOOR COURTESY LIGHT SWITCH ASSEMBLY**

OK

4 CHECK HARNESS AND CONNECTOR (FRONT DOOR COURTESY LIGHT SWITCH - INSTRUMENT PANEL J/B)

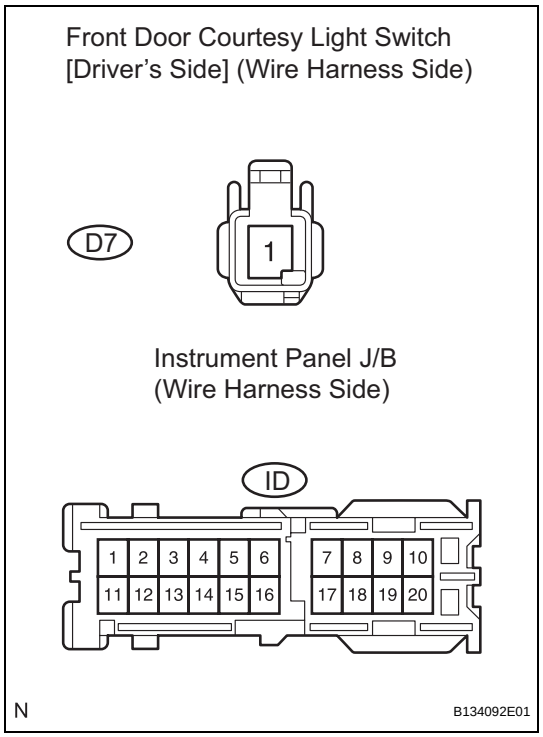

(a) Disconnect the D7 courtesy light switch and ID instrument panel J/B connectors.
(b) Measure the resistance according to the value(s) in the table below.

Standard resistance (Check for open)

Tester Connection	Specified Condition
1 (D7-1) - DCTY (ID-1)	Below 1 Ω

NG → **REPAIR OR REPLACE HARNESS OR CONNECTOR**

OK

REPLACE INTEGRATION RELAY

DL